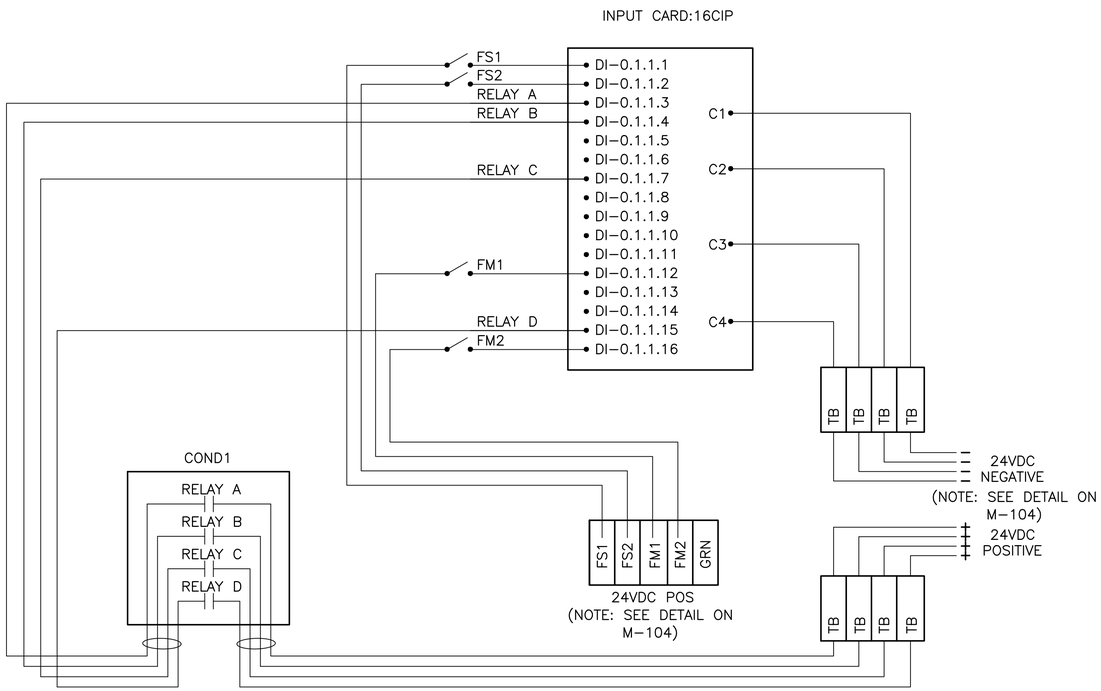

4 CONTROL INPUT SINK SCHEMATICS
ME-HVAC-009 SCALE: NONE

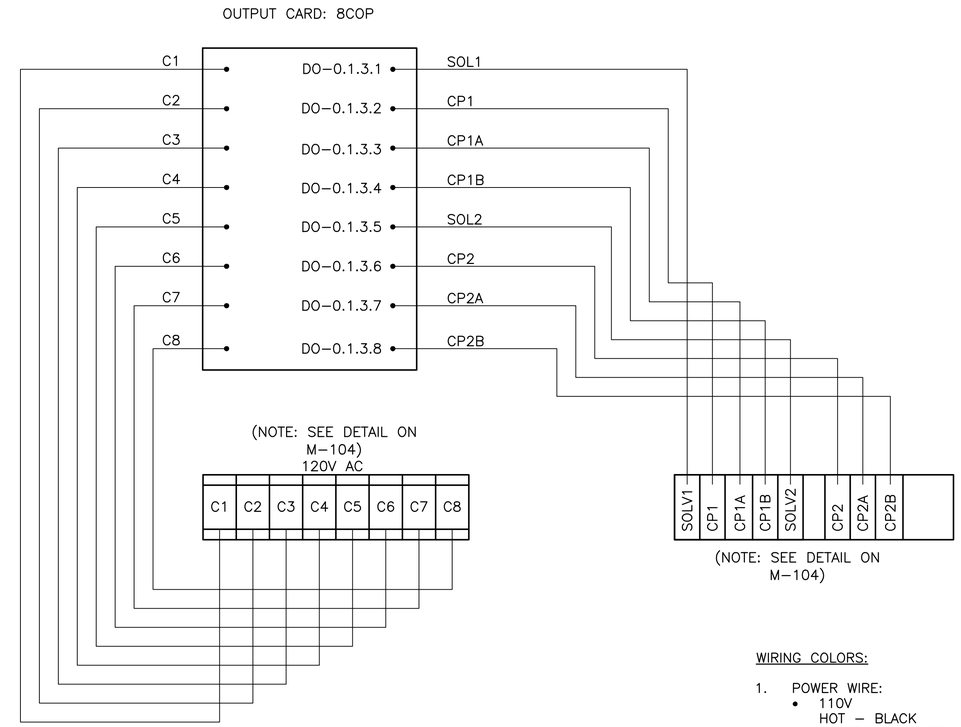

5 CONTROL OUTPUT SCHEMATICS
ME-HVAC-009 SCALE: NONE

WIRING COLORS:

1. POWER WIRE:
   - 110V
     HOT – BLACK
     NEUTRAL – WHITE
     GROUND – GREEN W/YELLOW STRIPE
   - 24V
     POSITIVE(+) – BLUE
     NEGATIVE(–) – WHITE W/BLUE STRIPE
   - GREEN OR GREEN W/YELLOW STRIPE WILL ONLY BE USED FOR GROUND WIRE.
   - ORANGE – WIRE THAT REMAINS ENERGIZED WHEN MAIN SUPPLY CIRCUIT DISCONNECT IS IN OFF POSITION.
2. CONTROL WIRES:
   - AC CONTROL CIRCUITS 120V – RED
   - PLC INPUTS – VIOLET
   - PLC OUTPUTS – GREY
   - MISC CIRCUITS & DATA COLLECTION CIRCUITS – BROWN
   - EXTERNALLY FED CIRCUITS (INTERLOCKS) – YELLOW

COND1 - SENSOR MODULE WIRING TABLE
3700 SERIES INDUCTIVE CONDUCTIVITY SENSOR WIRING

CONNECTOR PIN #	SIGNAL	SENSOR WIRE
1	SENSE	GREEN
2	SIGNAL GROUP/TEMP -	YELLOW
3	-	-
4	-	-
5	-	-
6	-	-
7	-	-
8	-	-
9	SHIELD	CLEAR
10	TEMP +	RED
11	DRIVE 1	WHITE
12	DRIVE 2	BLUE

COND1 - NETWORK MODULE WIRING TABLE
MODBUS WIRING WITH RS485

CONNECTOR	CONNECTOR BLOCK PIN #	SIGNAL	DESCRIPTION	FUNCTION
J1	9	-	-	-
	8	-	-	-
	7	-	-	-
	6	GROUND OUT	SIGNAL COMMON (MULTI-DROP NETWORK)	RS485
	5	B (-) OUT	OUTPUT FROM THE MODULE (MULTI-DROP NETWORK)	RS485
	4	A (+) OUT	OUTPUT FROM THE MODULE (MULTI-DROP NETWORK)	RS485
	3	GROUND IN	SIGNAL COMMON	RS485
	2	B (-) IN	INPUT INTO THE MODULE	RS485
	1	B (-) IN	INPUT INTO THE MODULE	RS485

"PROFESSIONAL CERTIFICATION: I HEREBY CERTIFY THAT THESE DOCUMENTS WERE PREPARED OR APPROVED BY ME, AND THAT I AM A DULY LICENSED PROFESSIONAL ENGINEER UNDER THE LAWS OF THE STATE OF MARYLAND."

LICENSE No. _____

EXPIRATION DATE: _____

- COMAR 09.23.03.10

DESIGNED	R. HERD	08/01/12 DATE
DRAWN	Y. LIU	08/15/12 DATE
CHECKED	P. PETERSEN	08/31/12 DATE

REFERENCE DRAWINGS

NUMBER	TITLE

REVISIONS

DATE	NUM	DESCRIPTION

WASHINGTON METROPOLITAN AREA TRANSIT AUTHORITY

OFFICE OF DESIGN AND CONSTRUCTION
ENGA - MECHANICAL ENGINEERING

APPROVED
-
ENGINEER OF RECORD
DATE

APPROVED
PAUL PETERSEN
DIRECTOR
DATE

MECHANICAL DESIGN DRAWING
HVAC
CHILLER WATER PLANT
CONDENSER WATER TREATMENT SYSTEM

M NO.	CONTRACT NO.	SCALE	DRAWING NO.	SHEET NO.
M-	FQ-	AS NOTED	ST-ME-HVAC-009	03 of 06

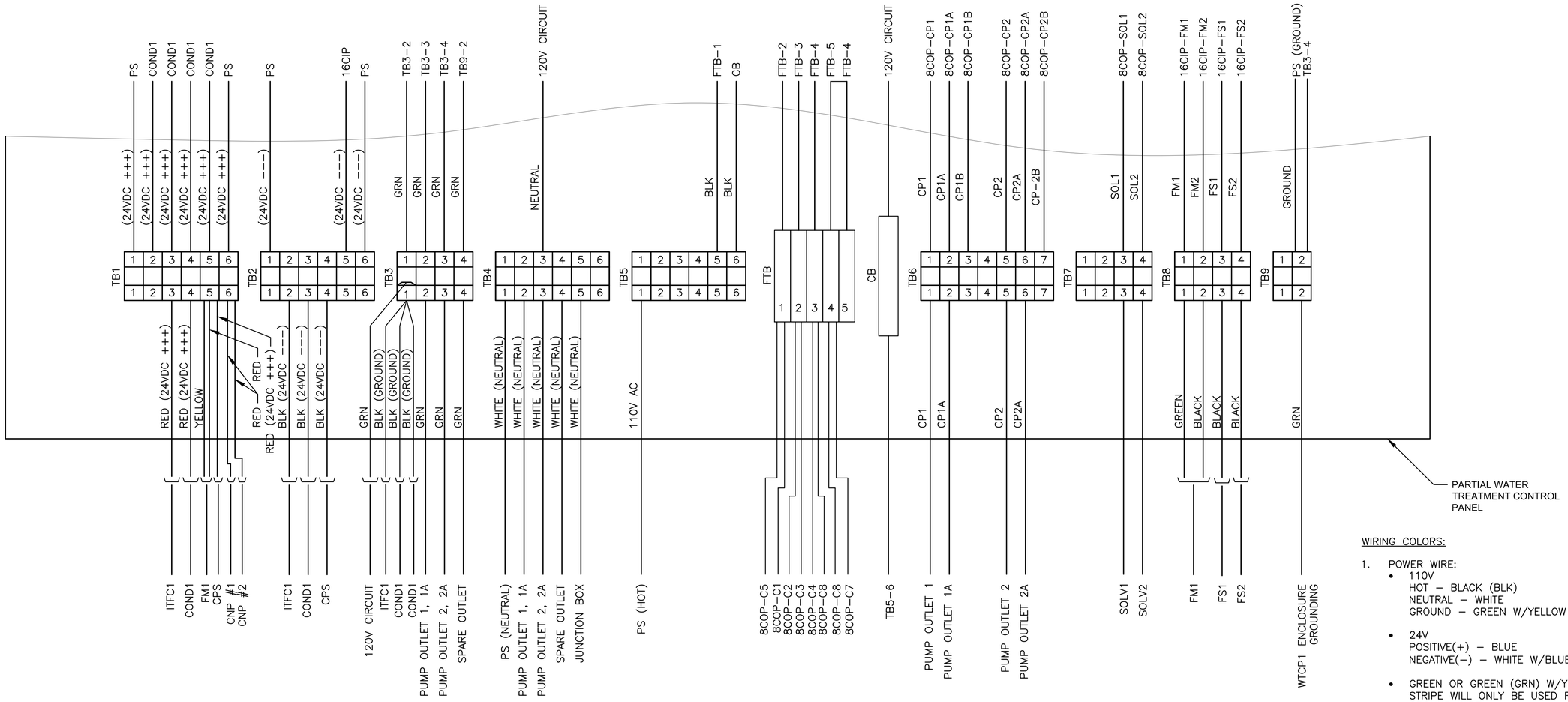

6 INTERCONNECTION DIAGRAM

ME-HVAC-009 SCALE: NONE

WIRING COLORS:

1. POWER WIRE:
   - 110V
     HOT – BLACK (BLK)
     NEUTRAL – WHITE
     GROUND – GREEN W/YELLOW STRIPE
   - 24V
     POSITIVE(+) – BLUE
     NEGATIVE(–) – WHITE W/BLUE STRIPE
   - GREEN OR GREEN (GRN) W/YELLOW STRIPE WILL ONLY BE USED FOR GROUND WIRE.
   - ORANGE – WIRE THAT REMAINS ENERGIZED WHEN MAIN SUPPLY CIRCUIT DISCONNECT IS IN OFF POSITION.
2. CONTROL WIRES:
   - AC CONTROL CIRCUITS 120V – RED
   - PLC INPUTS – VIOLET
   - PLC OUTPUTS – GREY
   - MISC CIRCUITS & DATA COLLECTION CIRCUITS – BROWN
   - EXTERNALLY FED CIRCUITS (INTERLOCKS) – YELLOW

"PROFESSIONAL CERTIFICATION: I HEREBY CERTIFY THAT THESE DOCUMENTS WERE PREPARED OR APPROVED BY ME, AND THAT I AM A DULY LICENSED PROFESSIONAL ENGINEER UNDER THE LAWS OF THE STATE OF MARYLAND."

LICENSE No. _____

EXPIRATION DATE: _____

- COMAR 09.23.03.10

DESIGNED	R. HERD	08/01/12 DATE
DRAWN	Y. LIU	08/15/12 DATE
CHECKED	P. PETERSEN	08/31/12 DATE

REFERENCE DRAWINGS

NUMBER	TITLE

REVISIONS

DATE	NUM	DESCRIPTION

WASHINGTON METROPOLITAN AREA TRANSIT AUTHORITY

OFFICE OF DESIGN AND CONSTRUCTION
ENGA - MECHANICAL ENGINEERING

APPROVED - DATE
ENGINEER OF RECORD

APPROVED PAUL PETERSEN DATE
DIRECTOR

MECHANICAL DESIGN DRAWING
HVAC
CHILLER WATER PLANT
CONDENSER WATER TREATMENT SYSTEM

M NO.	CONTRACT NO.	SCALE	DRAWING NO.	SHEET NO.
M-	FQ-	AS NOTED	ST-ME-HVAC-009	04 of 06

7
ME-HVAC-009

PARTIAL WIRING SCHEMATIC - CONDENSER WATER TREATMENT CONTROL PANEL

SCALE: NONE

"PROFESSIONAL CERTIFICATION: I HEREBY CERTIFY THAT THESE DOCUMENTS WERE PREPARED OR APPROVED BY ME, AND THAT I AM A DULY LICENSED PROFESSIONAL ENGINEER UNDER THE LAWS OF THE STATE OF MARYLAND."

LICENSE No. ________,

EXPIRATION DATE: ,

- COMAR 09.23.03.10

DESIGNED	R. HERD	08/01/12 DATE
DRAWN	Y. LIU	08/15/12 DATE
CHECKED	P. PETERSEN	08/31/12 DATE

REFERENCE DRAWINGS

NUMBER	TITLE

REVISIONS

DATE	NUM	DESCRIPTION

metro

WASHINGTON METROPOLITAN AREA TRANSIT AUTHORITY

OFFICE OF DESIGN AND CONSTRUCTION
ENGA - MECHANICAL ENGINEERING

APPROVED
- DATE
ENGINEER OF RECORD

APPROVED
PAUL PETERSEN DATE
DIRECTOR

MECHANICAL DESIGN DRAWING
HVAC
CHILLER WATER PLANT
CONDENSER WATER TREATMENT SYSTEM

M NO.	CONTRACT NO.	SCALE	DRAWING NO.	SHEET NO.
M-	FQ-	AS NOTED	ST-ME-HVAC-009	05 of 06

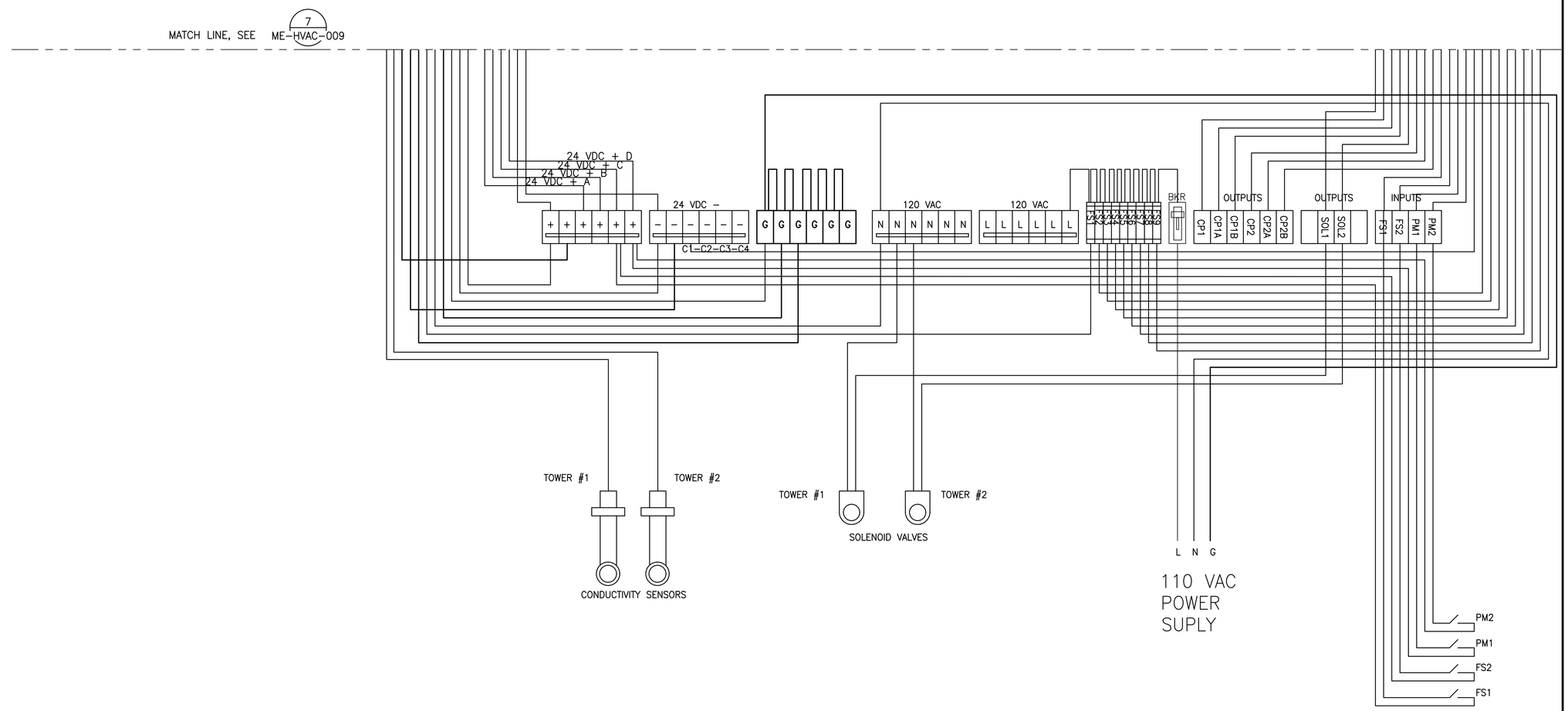

8 ME–HVAC–009

PARTIAL WIRING SCHEMATIC -
CONDENSER WATER TREATMENT CONTROL PANEL

SCALE: NONE

"PROFESSIONAL CERTIFICATION: I HEREBY CERTIFY THAT THESE DOCUMENTS WERE PREPARED OR APPROVED BY ME, AND THAT I AM A DULY LICENSED PROFESSIONAL ENGINEER UNDER THE LAWS OF THE STATE OF MARYLAND."

LICENSE No. _____

EXPIRATION DATE: _____

- COMAR 09.23.03.10

DESIGNED	R. HERD	08/01/12 DATE
DRAWN	Y. LIU	08/15/12 DATE
CHECKED	P. PETERSEN	08/31/12 DATE

REFERENCE DRAWINGS

NUMBER	TITLE

REVISIONS

DATE	NUM	DESCRIPTION

WASHINGTON METROPOLITAN AREA TRANSIT AUTHORITY

OFFICE OF DESIGN AND CONSTRUCTION
ENGA - MECHANICAL ENGINEERING

APPROVED
-
ENGINEER OF RECORD
DATE

APPROVED
PAUL PETERSEN
DIRECTOR
DATE

MECHANICAL DESIGN DRAWING
HVAC
CHILLER WATER PLANT
CONDENSER WATER TREATMENT SYSTEM

M NO.	CONTRACT NO.	SCALE	DRAWING NO.	SHEET NO.
M-	FQ-	AS NOTED	ST-ME-HVAC-009	06 of 06

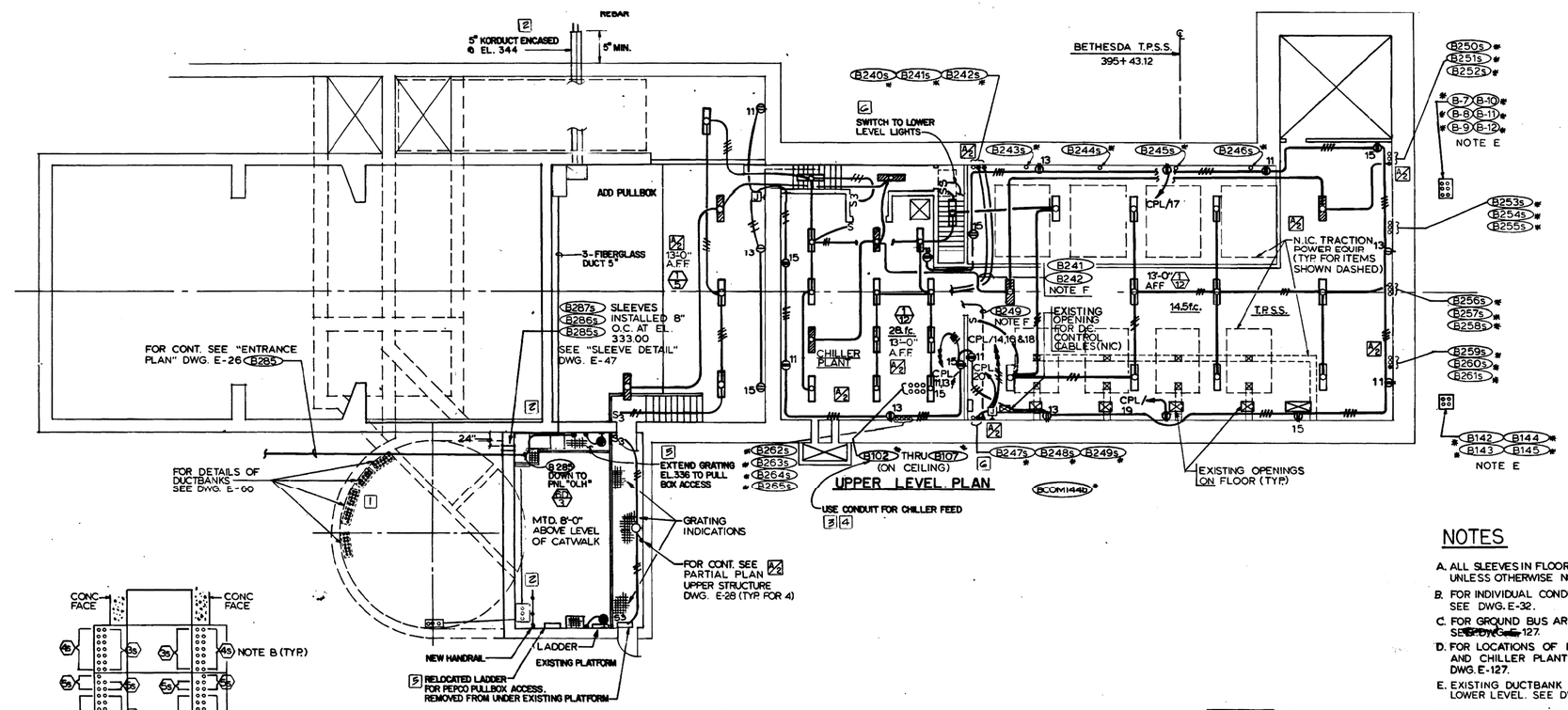

NOTES

A. ALL SLEEVES IN FLOOR SLAB UNLESS OTHERWISE NOTED.

B. FOR INDIVIDUAL CONDUIT DESIGNATIONS, SEE DWG. E-32.

C. FOR GROUND BUS ARRANGEMENT, SEE DWG. E-127.

D. FOR LOCATIONS OF PANELS CP, CPL AND CHILLER PLANT EQUIPMENT, SEE DWG. E-127.

E. EXISTING DUCTBANK DOWN TO TPSS LOWER LEVEL. SEE DWG. E-32.

F. FOR CONTINUATION SEE DWG. E-127

G. COORDINATE EXACT LOCATIONS OF LIGHTING FIXTURES WITH TRACTION POWER STAGE CONTRACTOR AND OTHER TRADES.

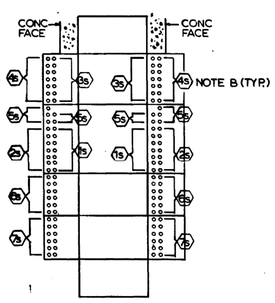

DETAIL 1 (E-32)
PULLBOX-EXPLODED VIEW

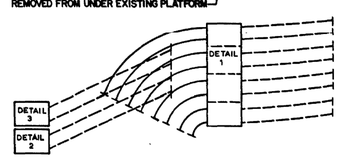

SECTION A-A (E-32)
(DEVELOPED) NOT TO SCALE

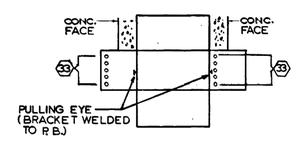

DETAIL 2 (E-32)
PULLBOX-EXPLODED VIEW

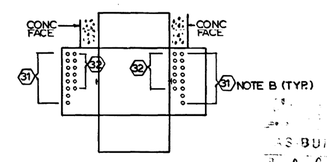

DETAIL 3 (E-32)
PULLBOX-EXPLODED VIEW

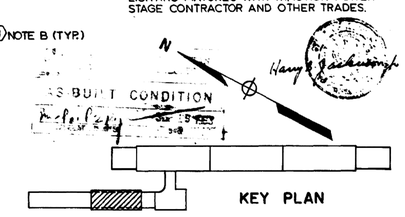

KEY PLAN

DESIGNED	P.S. CHU	8-16-78 DATE
DRAWN	E. ROCHA	8-16-78 DATE
CHECKED	H.B. ZACKRISON	6-16-80 DATE
APPROVED	H.B. ZACKRISON	6-16-80 DATE

REFERENCE DRAWINGS

NUMBER	DESCRIPTION
S-113	NORTH VENT SHAFT & PWR. SUBSTA. STAIRS & LADDER
A-50	SUBSTATION - CHILLER PLANT
M-25	SUBSTATION - PLAN & SECTION

REVISIONS

DATE	BY		DESCRIPTION
9-25-80	H.Z.		CLARIFIED LIGHTING FIXTURE LOCATIONS AND PURPOSE OF DASHED ITEMS
7-20-83	MD	1	REV. PER PCO. 30 , AS-BUILT
"	"	2	REV. PER PCO. 51 , AS-BUILT
"	"	3	REV. PER PCO. 56 , AS-BUILT
7-20-83	MD	6	REV. PER FIELD COND. , AS-BUILT
"	"	5	REV. PER PCO. 83 , AS-BUILT
"	"	4	REV. PER PCO. 56 REV. 1 , AS-BUILT

3889 H STATE OF MARYLAND

WASHINGTON METROPOLITAN AREA TRANSIT AUTHORITY

MATHEWS • CHATELAIN • BEALL
ENGINEERS AND ARCHITECTS
SECTION DESIGNER
SUBMITTED DATE 8-15-80

DE LEUW, CATHER & COMPANY
GENERAL ENGINEERING CONSULTANT

HARRY WEESE & ASSOCIATES
GENERAL ARCHITECTURAL CONSULTANT
APPROVED

ROCKVILLE ROUTE
BETHESDA STATION
TRACTION POWER S.S. & CHILLER PLANT- LTG. & PWR.

SCALE 1/8"=1'-0" 10 2 4 6 8 10
DRAWING NO. FA 11 -E-33
M334-182

NOTES :

1. INCOMING PEPCO FEEDERS FOR NORTH AC SWITCHGEAR, SEE DETAIL 1 & 2 ON DWG. E3a-E-36.
2. SEE DWG. E3a-E-54 FOR CHILLER MOTOR CONTROL CENTER SINGLE LINE DIAGRAM.
3. FURNISH & INSTALL CHILLER STARTER AS RECOMMENDED BY MANUFACTURER.
4. SIX 5" CONDUITS THROUGH ROOF FOR INCOMING PEPCO CABLES, SEE DWG. E3a-E-37.
5. FIRE ALARM, INTRUSION CONDUIT, AND JUNCTION BOX, SEE DWG. E3a-FIA-20.
6. SWITCH SHALL BE PROVIDED WITH A PERMANENT LABEL MARKED "FOR EMERGENCY USE ONLY".

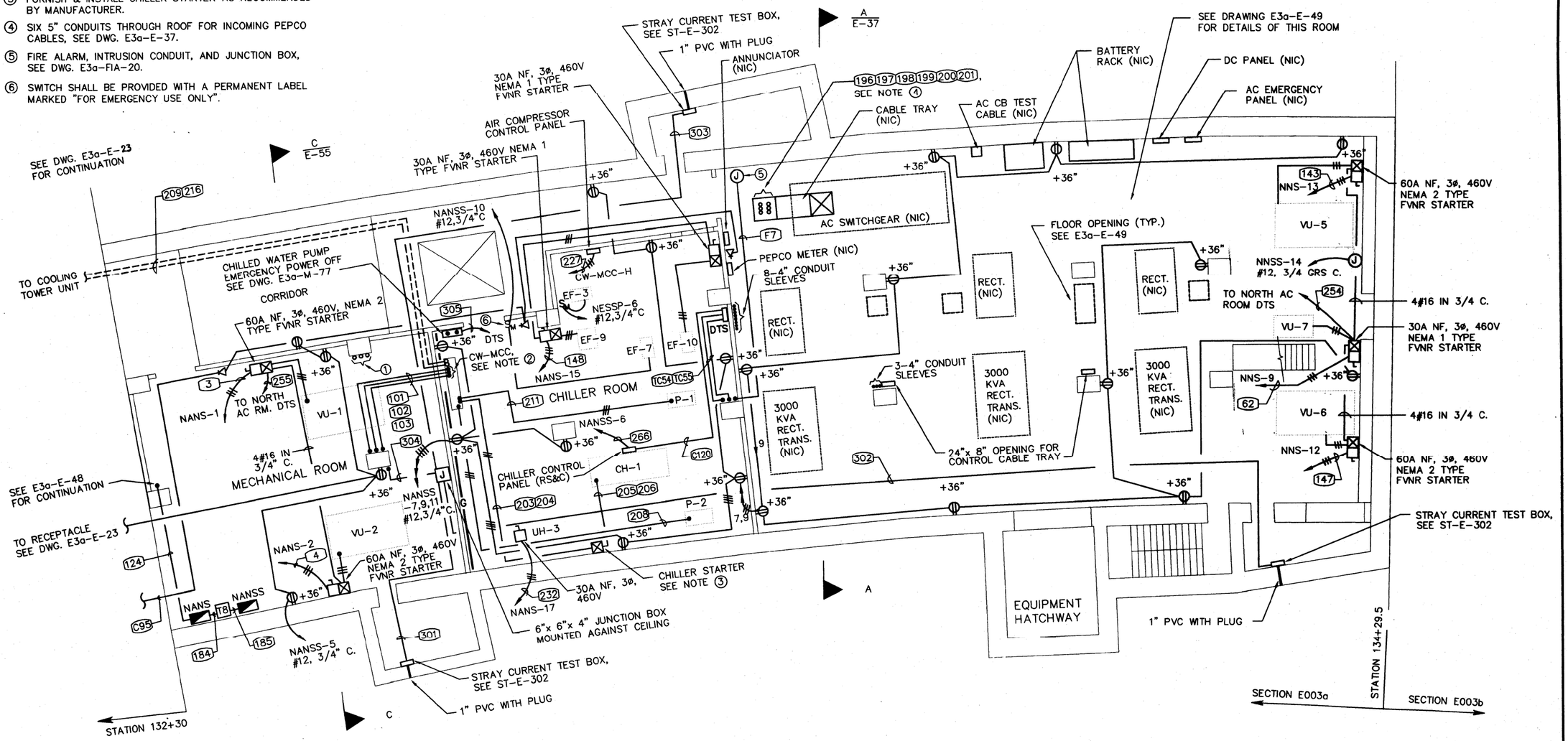

NORTH SERVICE ROOMS – MEZZANINE LEVEL – POWER

PLATFORM 132+30 to 134+30

1E0031

DESIGNED	T.X.P.	3-4-94 DATE
DRAWN	H.T.H.	3-4-94 DATE
CHECKED	H.K.O.	3-12-94 DATE
APPROVED	H.K.O.	3-15-94 DATE

REFERENCE DRAWINGS

NUMBER	DESCRIPTION
ST-TC-7	DTS CABINET
E3a-E-36	PEPCO CONDUITS ENTRANCE
E3a-E-37	PEPCO CONDUIT ENTRANCE
E3a-M-12	NORTH MEZZANINE PLAN-HVAC
E3a-FIA-20	NORTH SERVICE ROOMS
ST-E-302	STRAY CURRENT TEST BOX

REVISIONS

DATE	BY	DESCRIPTION

DISTRICT OF COLUMBIA HARRY K. OH No. 9898 REGISTERED PROFESSIONAL ENGINEER

WASHINGTON METROPOLITAN AREA TRANSIT AUTHORITY

COODDRY CARPENTER DIETZ AND ZACK SECTION DESIGNER ☐

OH & CHEN ASSOCIATES, P.A. MECHANICAL/ELECTRICAL ENGINEERS ☒

SUBMITTED BY

GREENBELT ROUTE
COLUMBIA HEIGHTS STATION
NORTH SERVICE ROOMS – MEZZANINE LEVEL

SCALE 1/8"=1'-0" 10 2 4 6 8 10

DRAWING NO. E3a-E-28 M905-529